Luoyang JCB Bearing Technology Company Limited

RK6-33N1Z

SLEWING BEARING

FLANGED FOUR-POINT CONTACT BALL SLEWING BEARING

Luoyang JCB Bearing Technology Company Limited

CONTENTS

01. MAIN SPECIFICATION

02. TECHNICAL INFORMATION

03. MANUFACTURE & INSPECTION

04. PACKING AND STORAGE

05. WARRANTY & CERTIFICATE

Luoyang JCB Bearing Technology Company Limited

RK6-33N1Z

01

MAIN SPECIFICATION

- REFERENCE DRAWING
- SPECIFICATION
- RAW MATERIAL
- LUBRICATIONA
- BOLT HOLES TYPE & BOLTS
- CORROSION PROTECTION

Luoyang JCB Bearing Technology Company Limited

RK6-33N1Z

REFERENCE DRAWING

This drawing is reference for user, if user request for formal drawing , please contact with us: sales@jcb-bearing.com, the official drawing will be submitted to them.

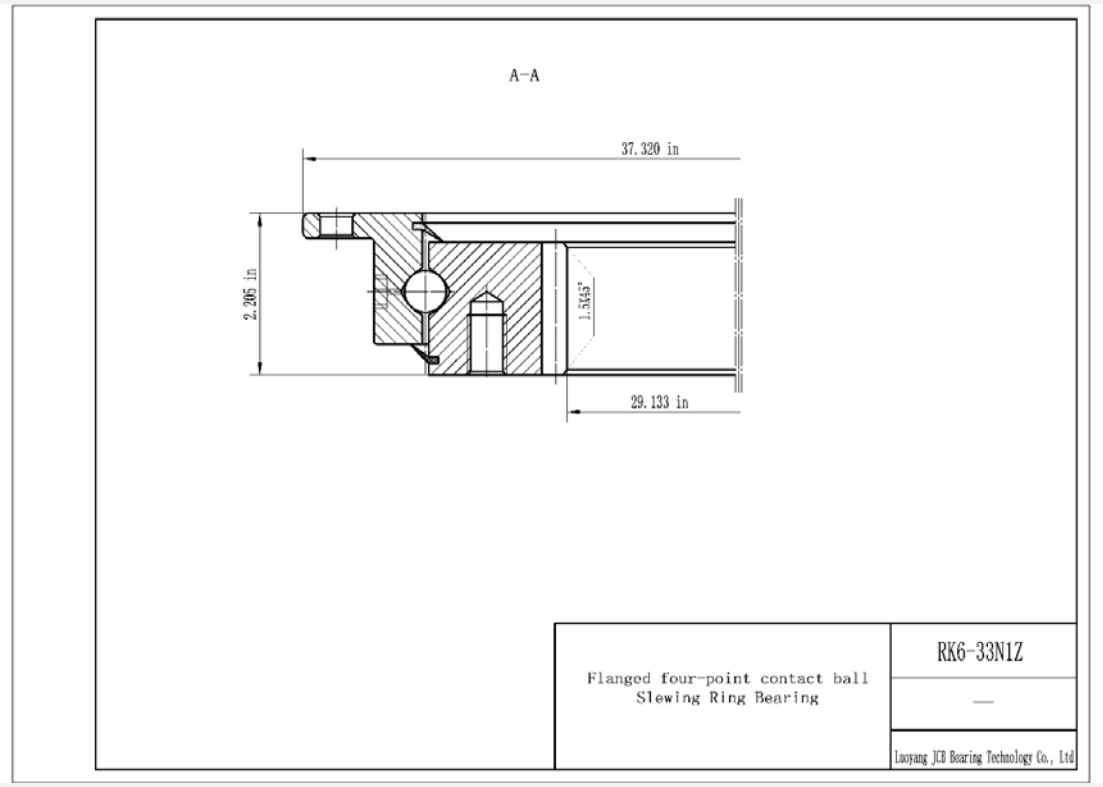

01-1

01-2

Luoyang JCB Bearing Technology Company Limited

SPECIFICATION

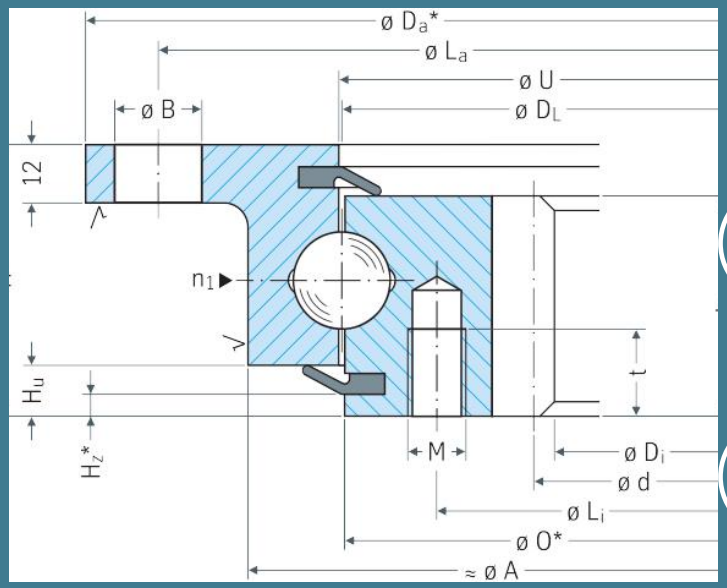

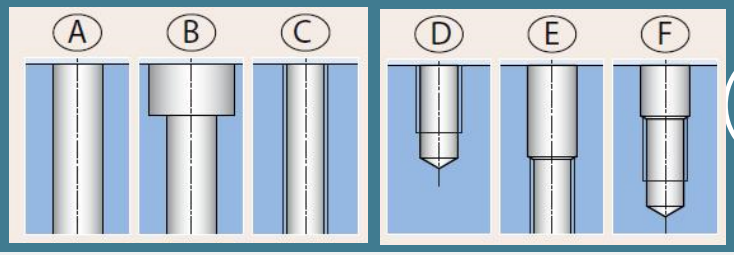

RK6-33N1Z

Inner diameter (Di) : 29.133 in
Outer diameter (Da) : 37.320 in
Overall height (H) : 2.205 in
Outer ring height (b): 1.811 in
Distance at bottom outer ring(Hu): 0.394 in
Height(H3): 0.47 in
Weight: 148 lbs
External bolt circle dia (La) : 36.250 in
Number of bolt holes per hole circle (na) :18
External bolt hole type : Selected by user
External bolt hole diameter(B) : 0.688 in
Internal bolt circle dia(Li): 31.500 in
Number of bolt holes per hole circle(ni):18
Internal bolt hole type : Selected by user
Internal bolt hole diameter (M) : 0.500-13UNC-2B in
Tooth number(z) :89
Module of gear(DP) :3
Tooth width (b) : 1.811 in